PRESSURE & DESIGN DATA

Design

Tech Data Sheets: G810, G820, G830

Rigid Joints

GRINNELL Rigid Couplings provide rigid gripping of the pipe. They are designed to bring the pipe ends close together and to ensure the coupling clamps firmly onto the pipe OD and the bottom of the grooves. Because rigid couplings clamp around the entire pipe surface, they provide resistance to flexural and torsional loads and therefore permit longer spacing to ASME/ANSI B 31.1 (Power Piping) and ASME/ANSI B 39.1 (Building Services) requirements.

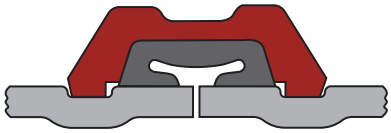

Flexible Joints

GRINNELL Flexible Couplings act as an "expansion joint", allowing linear and angular movement of the pipe. They are designed with the coupling keys engaging the pipe without gripping on the bottom of the grooves, while still providing for a restrained mechanical joint. This is particularly useful to allow for pipe expansion/contraction and piping misalignment.

Linear Movement (Flexible Couplings)

For thermal expansion with flexible couplings, the pipe ends at each joint should be fully gapped to the maximum amount. This can be accomplished by pressurising the system and then anchoring the system.

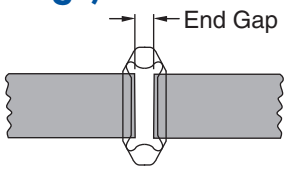

Pipe Ends Gapped for Expansion

For thermal contraction with flexible couplings, the pipe ends at each joint should be fully butted. The system can then be anchored in place to prevent the pipe ends from opening up to the maximum end gap when pressurised.

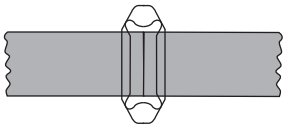

Pipe Ends Butted for Contraction

For design purposes, the maximum pipe end gap should be reduced to account for field practises as follows:

End Gap Reduction	
Pipe Size mm *Inches*	**Maximum Pipe End Gap**
42.4 – 88.9 *1 ¼ – 3*	*50%*
114.3 – 610.0 *4 – 24*	*25%*

The following values should be used as available pipe end movements for GRINNELL Figure 705, 707, and 716 Flexible Couplings:

Pipe End Movements		
Pipe Size mm *Inches*	**Cut Grooved mm** *Inches*	**Roll Grooved mm** *Inches*
42.4 – 88.9 *1 ¼ – 3*	**0 – 1.6** *0 – 0.063*	**0 – 0.8** *0 – 0.031*
114.3 – 610.0 *4 – 24*	**0 – 2.4** *0 – 0.188*	**0 – 2.4** *0 – 0.094*

* Roll grooved joints provide half the available movement of cut grooved joints.

Angular Deflection

GRINNELL Flexible Couplings are capable of accommodating angular deflection.

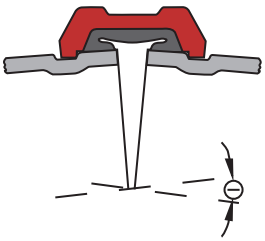

The deflection published is a maximum value. For design purposes the maximum deflection should be reduced to account for field practises as shown:

Deflection	
Pipe Size mm *Inches*	**Maximum Pipe Deflection Reduction**
42.4 – 88.9 *1 ¼ – 3*	*50%*
114.3 – 610.0 *4 – 24*	*25%*

Expansion/Contraction

GRINNELL Flexible Couplings are capable of accommodating pipe thermal movements provided they are properly gapped and a sufficient quantity of flexible couplings are used. Note that flexible couplings will not accommodate both full maximum linear movement and the maximum available angular deflection concurrently at the same joint.

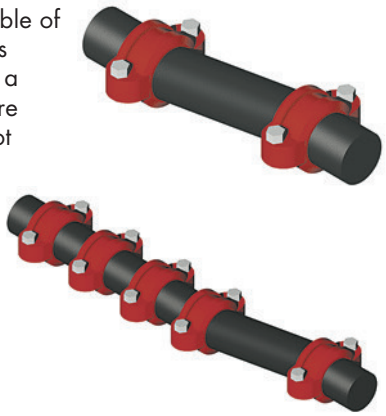

If it is desired to have both deflection and linear movement available, then the system should have sufficient flexible joints to accommodate the requirement.

Thermal Movement

Tech Data Sheets: G810, G820, G830

The following guidelines are similar to any expansion joint:

It is recommended that anchors be installed at changes of direction on the pipe lines to control the pipe movement. The thermal expansion/contraction in the piping system can be accommodated using GRINNELL Flexible Couplings. In designing anchoring systems, it is suggested that the following be taken into consideration:

- Pressure Thrusts
- Frictional Resistance of Any Guides or Supports
- Centrifugal Thrust Due to Velocity at Changes of Direction
- Activation Force Required to Compress or Expand a Flexible Coupling

Activation Force	
Pipe Size mm *Inches*	Activation Force N *Lbs.*
42.4	156
1 ¼	*35*
48.3	200
1 ½	*45*
60.3	311
2	*70*
73.0	645
2 ½	*100*
76.1	489
76,1mm	*110*
88.9	645
3	*145*
114.3	1068
4	*240*
141.3	1668
5	*375*
165.1	2224
165,1mm	*500*
168.3	2313
6	*520*
219.1	3914
8	*880*
273.0	6072
10	*1365*
323.9	8518
12	*1915*

Three methods are available as examples to accommodate thermal expansion/contraction:

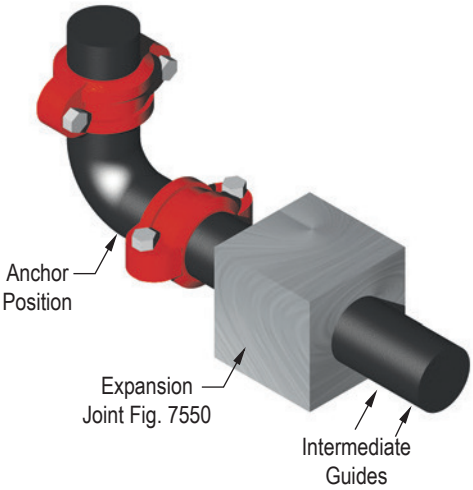

(1) Design the system with rigid couplings and place expansion joints at the proper locations. Expansion joints may be a series of flexible grooved couplings of a sufficient quantity to accommodate the movement.

(2) Design the system with flexible and/or rigid couplings and allow the pipe to move in directions desired, with the use of anchors and guides if so required. With this method, it is important to ensure that movement at branch connections, changes of direction, equipment hookup, etc., will not cause damage or harmful stresses.

(3) Design the system with flexible couplings utilising the expansion/contraction capabilities of these products.

The following example illustrates this method:

- 150mm *(6")* Schedule 40 steel pipe, roll grooved, 45.7m *(150')* long, anchored at each end
- Maximum Temperature = 93.3°C *(200°F)*
- Minimum Temperature = 4.4°C *(40°F)*
- Install Temperature = 26.6°C *(80°F)*

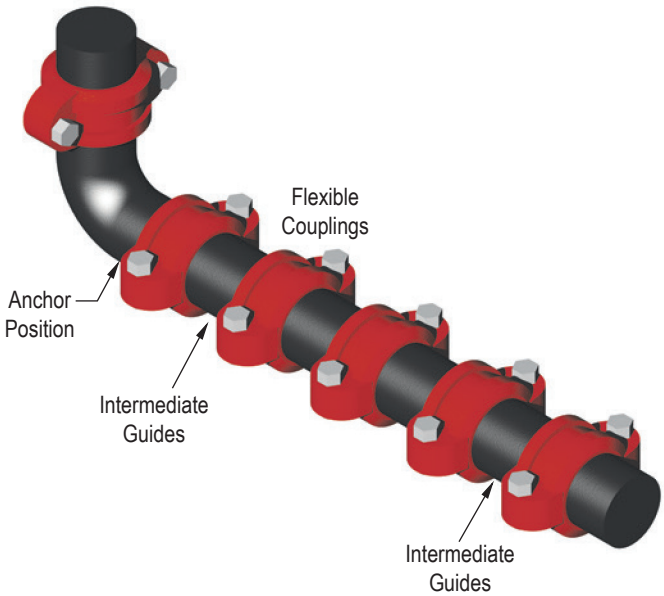

Thermal Movement

Tech Data Sheets: G810, G820, G830

Directions to calculate the number of couplings required to compensate for the thermal expansion and contraction of pipe (by example):

(1) Thermal Contraction

Utilise the Thermal Expansion Table. Allowance for the minimum installation temperature, in this case 26.6°C to 4.4°C *(80°F to 40°F)*, is calculated as:

26.6°C = 15,5mm per 30,5m
4.4°C = 7,6mm per 30,5m
Difference = 7,9mm per 30,5m
For 45,7m of pipe = 7,9mm x 1.5 = 11,9mm per 45,7m

(80°F = 0.61" per 100'
40°F = 0.30" per 100'
Difference = 0.31" per 100'
For 150' of pipe = 0.31" x 1.5 = 0.47" per 150')

(2) Thermal Expansion

Utilise the Thermal Expansion Table. Allowance for the minimum installation temperature, in this case 26.6°C to 93.3°C *(80°F to 200°F)*, is calculated as:

93.3°C = 38,6mm per 30,5m
26.6°C = 15,5mm per 30,5m
Difference = 23,1mm per 30,5m
For 45,7m of pipe = 23,1mm x 1.5 = 34,5mm per 45,7m

(200°F = 1.52" per 100'
80°F = 0.61" per 100'
Difference = 0.91" per 100'
For 150' of pipe = 0.91 x 1.5 = 1.36" per 150')

(3) Couplings Required

Available linear movement for a 150mm *(6")* Figure 707 Flexible Coupling on roll grooved pipe = 2.4mm *(0.094")* per coupling.

Fully butted together for contraction only. Therefore the number of Figure 707 Flexible Couplings required:

- 11.9mm / 2.4mm per coupling = 4.96
  (0.47" / 0.094" per coupling = 5.0)

- Use 5 Figure 707 couplings for pipe contraction

(b) Fully gapped apart for expansion only. Therefore the number of Figure 707 Flexible Couplings required:

- 34.5mm / 2.4mm per coupling = 14.38
  (1.36" / 0.094" per coupling = 14.47)

- Use 15 Figure 707 Flexible Couplings for pipe expansion

Thermal Expansion of Carbon Steel in millimetres per Metres Between 0°C *(-32°F)* **and Indicated Temperature**

Temperature C° / F°	Thermal Expansion mm/30.5m
-40 / -40	-0.500
-30 / -22	-0.375
-20 / -4	-0.250
-10 / 14	-0.125
0 / 32	0.000
10 / 50	0.125
20 / 68	0.250
30 / 86	0.375
40 / 104	0.500
50 / 122	0.625
60 / 140	0.750
70 / 158	0.875
80 / 176	1.000
90 / 194	1.125
100 / 212	1.250
120 / 248	1.500

Based on coifiecient of thermal expansion = 0.0000125 mm/mm/°C carbon steel

Misalignment and Deflection

Tech Data Sheets: G810, G820, G830

GRINNELL Flexible Couplings provide for restrained joints and allow for deflection to aid where the pipe or equipment is misaligned.

Note that flexible couplings will not accommodate both full maximum linear movement and the maximum available angular deflection concurrently at the same joint.

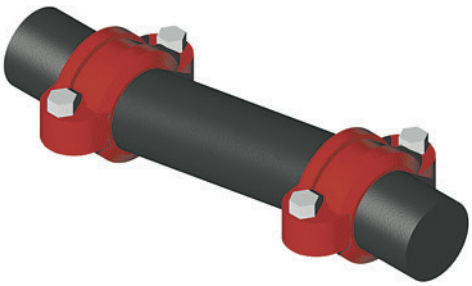

If it is desired to have both deflection and linear movement available, then the system should have sufficient flexible joints to accommodate the requirement.

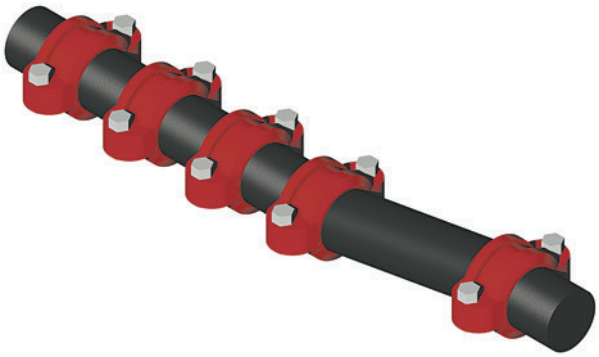

Flexible couplings are also useful in laying out curved piping systems.

$$R = \frac{L}{(2)\left(\sin\frac{\theta}{2}\right)}$$

$$L = (2)(R)\left(\sin\frac{\theta}{2}\right)$$

$$N = \frac{T}{\theta}$$

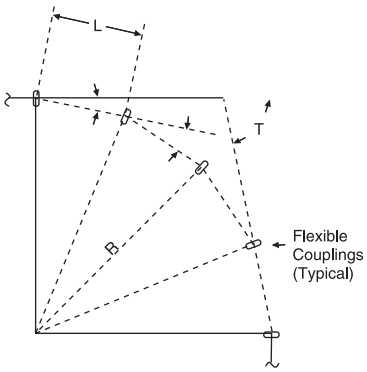

R = Radius of curve

L = Pipe length

θ = Deflection from centre line, in degrees, for each coupling (see table)

N = Number of flexible couplings needed

T = Total deflection, in degrees, required

Design Deflection for Roll Grooved Pipe

Deflection O (Roll Grooved Pipe)	
Pipe Size mm *Inches*	**Figures 705 & 707**
42.4 *1 ¼*	**1.08°**
48.3 *1 ½*	**0.94°**
60.3 *2*	**0.75°**
73.0 *2 ½*	**0.62°**
76.1 *76,1mm*	**0.60°**
88.9 *3*	**0.51°**
114.3 *4*	**1.19°**
141.3 *5*	**0.97°**
165.1 *165,1mm*	**0.83°**
168.3 *6*	**0.81°**
219.1 *8*	**0.63°**
273.0 *10*	**0.50°**
323.9 *12*	**0.42°**
Incorporates the recommended safety factor reduction for field practises (50% for sizes 32mm - 80mm (*1 ¼" – 3"*) and 25% for sizes 100mm - 300mm (*4" – 12"*)).	

Pipe Support

Tech Data Sheets: G810, G820, G830

All piping systems require that the support system accommodate the weight of the pipe, joint connections, fluid, and other system components. In addition, consideration may be necessary in reducing stresses, accommodating thermal expansion or contraction, building settlement, seismic movement, etc. The following tables provide guidelines for grooved steel piping products without concentrated loads between supports.

Flexible Joints

For pipe runs when linear movement is accommodated by the flexible coupling:

Number of Hangers Per Pipe Length								
Pipe Size mm *Inches*	Pipe Length in Metres *Feet*							
	10	12	15	22	25	30	35	40
	3.3	*3.7*	*4.6*	*6.7*	*7.6*	*9.1*	*10.7*	*12.2*
	Average Number of Hangers Per Pipe Length							
42.4 – 60.3 *1 1/4 - 2*	*2*	*2*	*2*	*3*	*4*	*4*	*5*	*6*
73.0 – 114.3 *2 1/2 - 4*	*1*	*2*	*2*	*2*	*2*	*3*	*4*	*4*
141.3 – 609.6 *5 - 24*	*1*	*1*	*2*	*2*	*2*	*3*	*3*	*3*

For pipe runs when linear movement is not required:

Distance Between Supports	
Nominal Size mm *Inches*	Maximum Distance Between Supports Metres *Feet*
42.4 - 48.3 *1 1/4 - 1 1/2*	**3.7** *12*
60.3 - 219.1 *2 - 8*	**4.6** *15*
273.0 - 323.9 *10 - 12*	**4.9** *16*
355.6 - 406.4 *14 - 16*	**5.5** *18*
457.2 - 609.6 *18 - 24*	**6.1** *20*
Note: The requirements of ANSI, ASME or other code groups may require additional supports.	

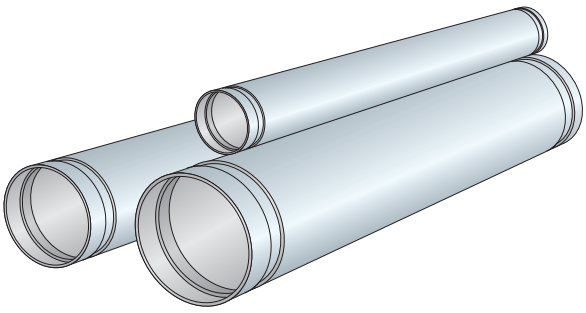

Rigid Joints

For pipe runs with rigid couplings:

Pipe Size		Suggested Maximum Span Between Supports – Metres *Feet*					
Nominal DN *In.*	O.D. mm *In.*	Water Service			Air Service		
		I	II	III	I	II	III
25	**33.4**	**2.1**	**2.7**	**3.7**	**2.7**	**9**	**3.7**
1	*1.315*	*7*	*9*	*12*	*9*	*2.7*	*12*
32	**42.4**	**2.1**	**3.4**	**3.7**	**2.7**	**11**	**3.7**
1 1/4	*1.660*	*7*	*11*	*12*	*9*	*3.4*	*12*
40	**48.3**	**2.1**	**3.7**	**4.6**	**2.7**	**13**	**4.6**
1 1/2	*1.900*	*7*	*12*	*15*	*9*	*4.0*	*15*
50	**60.3**	**3.0**	**4.0**	**4.6**	**4.0**	**15**	**4.6**
2	*2.375*	*10*	*13*	*15*	*13*	*4.6*	*15*
65	**73.0**	**3.4**	**4.3**	**4.6**	**4.3**	**16**	**4.6**
2 1/2	*2.875*	*11*	*14*	*15*	*14*	*4.9*	*15*
65	**76.1**	**3.4**	**4.3**	**4.6**	**4.3**	**16**	**4.6**
76.1mm	*3.000*	*11*	*14*	*15*	*14*	*4.9*	*15*
80	**88.9**	**3.7**	**4.6**	**4.6**	**4.6**	**17**	**4.6**
3	*3.500*	*12*	*15*	*15*	*15*	*5.2*	*15*
100	**114.3**	**4.3**	**5.2**	**4.6**	**5.2**	**21**	**4.6**
4	*4.500*	*14*	*17*	*15*	*17*	*6.4*	*15*
125	**133.0**	**4.9**	**5.8**	**4.6**	**6.1**	**24**	**4.6**
133.0mm	*5.236*	*16*	*19*	*15*	*20*	*7.3*	*15*
125	**139.7**	**4.6**	**5.5**	**4.6**	**5.2**	**23**	**4.6**
139.7mm	*5.500*	*15*	*18*	*15*	*19*	*7*	*15*
125	**141.3**	**4.9**	**5.8**	**4.6**	**6.1**	**24**	**4.6**
5	*5.563*	*16*	*19*	*15*	*20*	*7.3*	*15*
150	**165.1**	**5.2**	**6.1**	**4.6**	**6.4**	**25**	**4.6**
165.1mm	*6.500*	*17*	*20*	*15*	*21*	*7.6*	*15*
150	**168.3**	**5.2**	**6.1**	**4.6**	**6.4**	**25**	**4.6**
6	*6.625*	*17*	*20*	*15*	*21*	*7.6*	*15*
200	**219.1**	**5.8**	**6.4**	**4.6**	**7.3**	**28**	**4.6**
8	*8.625*	*19*	*21*	*15*	*24*	*8.5*	*15*
250	**273.0**	**5.8**	**6.4**	**4.6**	**7.3**	**31**	**4.6**
10	*10.750*	*19*	*21*	*15*	*24*	*9.4*	*15*
300	**323.9**	**7**	**6.4**	**4.6**	**9.1**	**33**	**4.6**
12	*12.750*	*23*	*21*	*15*	*30*	*10.1*	*15*
350	**355.6**	**7**	**6.4**	**4.6**	**9.1**	**33**	**4.6**
14	*14.000*	*23*	*21*	*15*	*30*	*10.1*	*15*
400	**406.4**	**8.2**	**6.4**	**4.6**	**10.7**	**33**	**4.6**
16	*16.000*	*27*	*21*	*15*	*35*	*10.1*	*15*
450	**457.2**	**8.2**	**6.4**	**4.6**	**10.7**	**33**	**4.6**
18	*18.000*	*27*	*21*	*15*	*35*	*10.1*	*15*
500	**508.0**	**9.1**	**6.4**	**4.6**	**11.9**	**33**	**4.6**
20	*20.000*	*30*	*21*	*15*	*39*	*10.1*	*15*
600	**609.6**	**9.8**	**6.4**	**4.6**	**12.8**	**33**	**4.6**
24	*24.000*	*32*	*21*	*15*	*42*	*10.1*	*15*

I - Spacing by ANSI B31.1 Power Piping Code
II - Spacing by ANSI B39.1 Building Piping Code
III - Spacing by NFPA 13 Sprinkler Systems (Steel Pipe except Threaded Lightwall)

Pipe Support

Tech Data Sheets: G810, G820, G830

Rotational Movement

GRINNELL Flexible Couplings are suitable for use in seismic as well as mining applications. The inherent capability of the flexible coupling to allow for linear movement, angular deflection, and rotational movement make it an excellent choice for reducing stresses in a piping system and to increase pipe life in slurry applications.

For mining applications where the pipe needs to be rotated, the system should be depressurised. The pipe coupling bolts/nuts can be loosened, pipe rotated, the bolts/nuts re-tightened, and the system be put back in service.

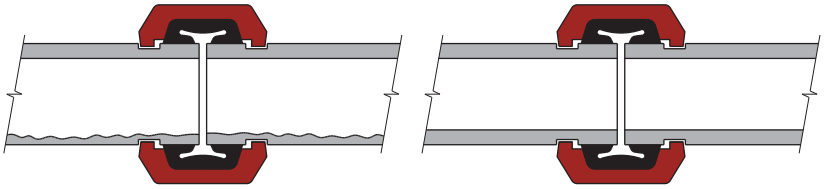

Even distribution of pipe wear can be achieved with this method on the inner service of the pipe.

Note: Precautions are necessary to monitor pipe wall thickness to evaluate pressure capability of the pipe with reduced wall.

Linear Movement

Flexible couplings are designed with the couplings keys engaging the pipe without gripping on the bottom of the groove while still providing for a restrained mechanical joint.

The inherent flexibility of the coupling must be considered when deciding on support arrangements for the piping system as movement can occur in more than one plane (linear movement, angular deflection, and rotational movement).

Upon system pressurization, each pipe end within the flexible couplings will expand to the maximum published value. The coupling keys make contact with the face of the groove and restrain the joint. In piping systems, this movement will be accumulative.

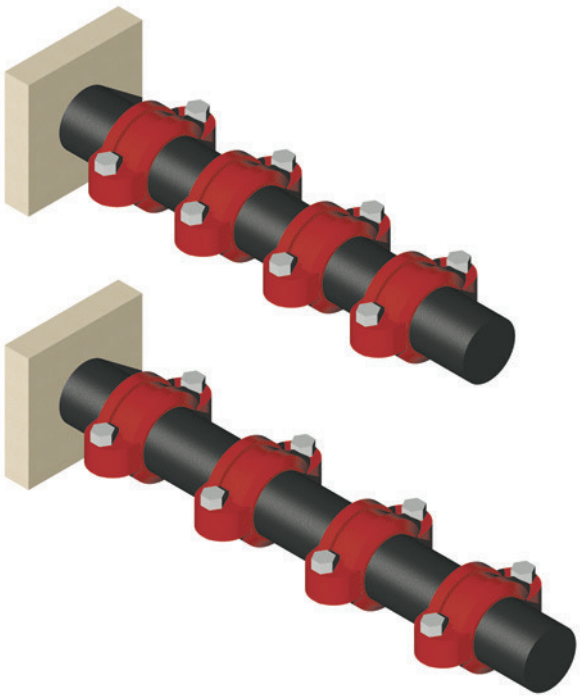

Pipe Support

Tech Data Sheets: G810, G820, G830

Angular Movement

System movement can be accommodated by providing for sufficient offset lengths. Temperature increases/decreases can further increase this movement.

When systems are anchored with partially deflected joints, the system can move to the fully deflected condition upon pressurization resulting in the "snaking" of the piping system. Lightweight hangers may not be suitable to prevent the lateral r

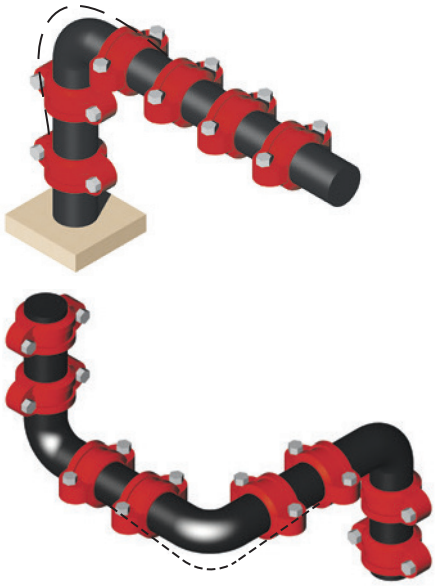

Pipe Support

Pipe hanger positioning is important when considering pipe "sagging" due to the flexible nature of the piping system. Proper positioning of hangers near the elbow, for example, should be considered.

The use of spring hangers or other methods can be considered to accommodate vibrations. Base supports, pressure thrust anchors, and pipe offsets can be used to direct pipe movement.

The use of rigid couplings can be considered to reduce the movement available with flexible couplings. Consideration of other methods of accommodation of pipe movements may be required.

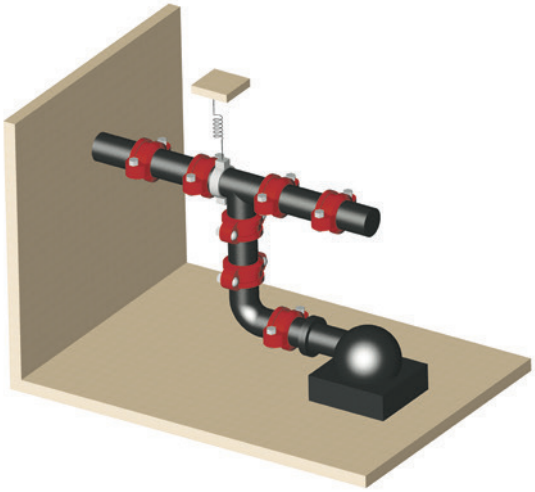

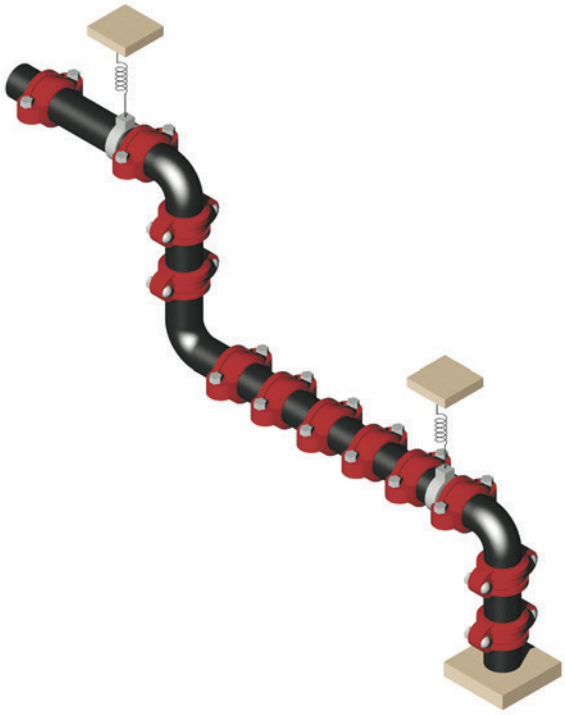

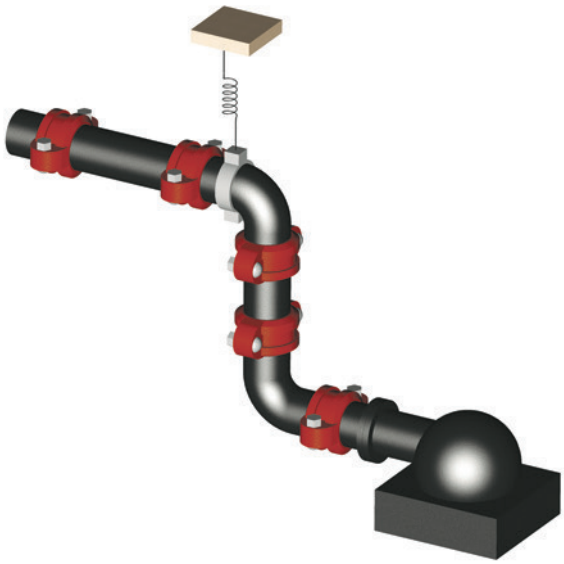

Vertical Piping

Tech Data Sheets: G810, G820, G830

Risers comprised of rigid couplings can be considered instead of welded or flanged systems. Where thermal movement exists, expansion joints and/or flexible couplings with offsets may be required.

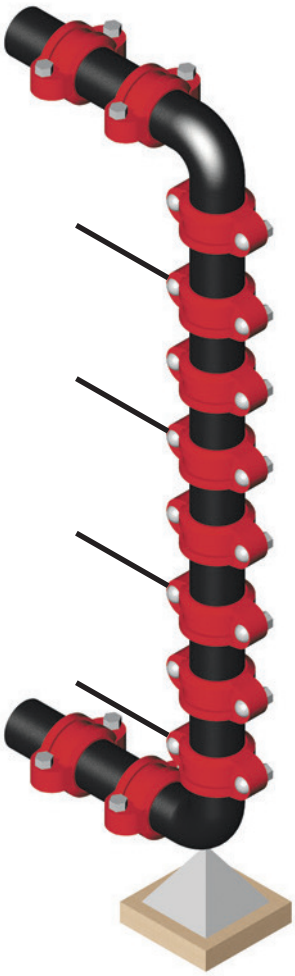

When using flexible couplings, the movement that occurs in long lengths of piping needs to be considered. Each joint can move up to the maximum pipe end separation published. This movement can accumulate and result in the growth of the piping system, for example at the top. Offsets may be necessary.

Should the riser contain branch connections, the movement which occurs at these locations with flexible couplings will also need to be considered.

One solution would be to anchor the vertical piping at appropriate locations to prevent movement which can cause stresses at the branches or equipment. The use of rigid couplings can be an advantage.

As always, good piping practise should prevail. It is the designer's responsibility to select products suitable for the intended service and to ensure that pressure ratings and performance data is not exceeded. Never remove any piping component or correct or modify any piping deficiencies without first depressurising and draining the system. Material and gasket selection should be verified to be compatible for the specific application.

Grinnell

Pipe Data

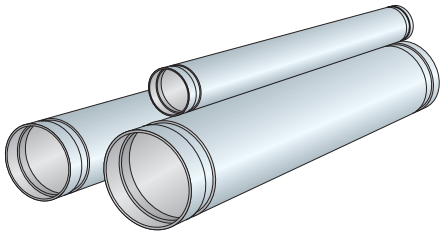

Pipe Size		Conversion Table Wall Thickness - mm *inches*								
Nominal DN *In.*	O.D. mm *In.*	Pipe ANSI B36.10						Pipe DIN Norm		
		Sch. 5	Sch. 10	Sch. 20	Sch. 30	Sch. 40	Sch. 80	DIN 2440	DIN 2448	DIN 2458
20	26.9	1.65	2.77	–	–	2.87	3.91	2.65	2.3	2
¾	*1.050*	*0.06*	*0.11*	*–*	*–*	*0.11*	*0.15*	*0.10*	*0.09*	*0.08*
25	33.4	1.65	2.77	–	–	3.38	4.55	3.25	2.6	2
1	*1.315*	*0.06*	*0.11*	*–*	*–*	*0.13*	*0.18*	*0.13*	*0.10*	*0.08*
32	42.4	1.65	2.77	–	–	3.56	4.83	3.25	2.6	2.3
1¼	*1.660*	*0.06*	*0.11*	*–*	*–*	*0.14*	*0.19*	*0.13*	*0.10*	*0.09*
40	48.3	1.65	2.77	–	–	3.68	5.08	3.25	2.6	2.3
1½	*1.900*	*0.06*	*0.11*	*–*	*–*	*0.14*	*0.20*	*0.13*	*0.10*	*0.09*
50	60.3	1.65	2.77	–	–	3.91	5.54	3.65	2.9	2.6
2	*2.375*	*0.06*	*0.11*	*–*	*–*	*0.15*	*0.22*	*0.14*	*0.11*	*0.10*
65	73.0	2.11	3.05	–	–	5.16	7.01	–	–	–
2½	*2.875*	*0.08*	*0.12*	*–*	*–*	*0.20*	*0.28*	*–*	*–*	*–*
65	76.1	–	–	–	–	–	–	3.65	2.9	2.6
76.1mm	*3.000*	*–*	*–*	*–*	*–*	*–*	*–*	*0.14*	*0.11*	*0.10*
80	88.9	2.11	3.05			5.49	7.61	4.05	3.2	2.9
3	*3.500*	*0.08*	*0.12*			*0.22*	*0.30*	*0.16*	*0.13*	*0.11*
100	108.0	–	–	–	–	–	–	–	3.6	2.9
108.0mm	*4.252*	*–*	*–*	*–*	*–*	*–*	*–*	*–*	*0.14*	*0.11*
100	114.3	2.11	3.05	–	–	6.02	8.56	4.5	3.6	3.2
4	*4.500*	*0.08*	*0.12*	*–*	*–*	*0.24*	*0.34*	*0.18*	*0.14*	*0.13*
125	133.0	–	–	–	–	–	–	–	4	3.6
133.0mm	*5.236*	*–*	*–*	*–*	*–*	*–*	*–*	*–*	*0.16*	*0.14*
125	139.7	–	–	–	–	–	–	4.85	–	–
139.7mm	*5.500*	*–*	*–*	*–*	*–*	*–*	*–*	*0.19*	*–*	*–*
125	141.3	2.77	3.4	–	–	6.55	9.53	–	–	–
5	*5.563*	*0.11*	*0.13*	*–*	*–*	*0.26*	*0.38*	*–*	*–*	*–*
150	159.0	–	–	–	–	–	–	–	4.5	4
159.0mm	*6.260*	*–*	*–*	*–*	*–*	*–*	*–*	*–*	*0.18*	*0.16*
150	165.1	–	–	–	–	–	–	4.85	4.5	4
165.1mm	*6.500*	*–*	*–*	*–*	*–*	*–*	*–*	*0.19*	*0.18*	*0.16*
150	168.3	2.77	3.4	–	–	7.11	10.97	–	–	4.5
6	*6.625*	*0.11*	*0.13*	*–*	*–*	*0.28*	*0.43*	*–*	*–*	*0.18*
200	219.1	2.77	3.76	6.35	7.04	8.18	12.7	–	6.3	4.5
8	*8.625*	*0.11*	*0.15*	*0.25*	*0.28*	*0.32*	*0.50*	*–*	*0.25*	*0.18*
250	273.0	3.4	4.19	6.35	7.8	9.27	15.06	–	6.3	5
10	*10.750*	*0.13*	*0.16*	*0.25*	*0.31*	*0.36*	*0.59*	*–*	*0.25*	*0.20*
300	323.9	3.96	4.57	6.35	8.38	10.31	17.45	–	7.1	5.6
12	*12.750*	*0.16*	*0.18*	*0.25*	*0.33*	*0.41*	*0.69*	*–*	*0.28*	*0.22*
350	355.6	4.19	6.35	7.94	9.53	11.1	19.05	–	8	5.6
14	*14.000*	*0.16*	*0.25*	*0.31*	*0.38*	*0.44*	*0.75*	*–*	*0.31*	*0.22*
400	406.4	–	6.35	7.94	9.53	12.7	21.41	–	8.8	6.3
16	*16.000*	*–*	*0.25*	*0.31*	*0.38*	*0.50*	*0.84*	*–*	*0.35*	*0.25*
450	457.2	–	6.35	7.94	11.13	14.28	23.8	–	10	6.3
18	*18.000*	*–*	*0.25*	*0.31*	*0.44*	*0.56*	*0.94*	*–*	*0.39*	*0.25*
500	508.0	–	6.35	9.53	12.7	15.06	26.19	–	11	6.3
20	*20.000*	*–*	*0.25*	*0.38*	*0.50*	*0.59*	*1.03*	*–*	*0.43*	*0.25*
600	609.6	–	6.35	9.53	14.28	17.45	30.94	–	12.5	6.3
24	*24.000*	*–*	*0.25*	*0.38*	*0.56*	*0.69*	*1.22*	*–*	*0.49*	*0.25*

Working Pressure Ratings (psi) on Light Wall Roll Grooved Steel Pipe

Tech Data Sheets: G810

Nominal Pipe Size ANSI Inches DN	Pipe Schedule	Pipe Wall Thickness Inches	Fig. 705 Flexible Coupling Max.	Fig. 707 Heavy Duty Flexible Coupling	Fig. 772 Rigid Coupling	Fig. 774 Grooved Rigid Coupling	Fig. 716a Flexible Reducing Coupling	Fig. 71 Flange
1 25	5	0.065	500	500	N/A	500	N/A	N/A
	10	0.109	500	750		500		
	40	0.133	500	1000		500		
1-1/4 32	5	0.065	500	500	750	500	N/A	N/A
	10	0.109	500	750	750	500		
	40	0.140	500	1000	750	500		
1-1/2 40	5	0.065	500	500	500	500	N/A	N/A
	10	0.109	500	750	750	500		
	40	0.145	500	1000	750	500		
2 50	5	0.065	500	500	500	500	N/A	300
	10	0.109	500	750	750	500		300
	40	0.154	500	1000	750	500		300
2-1/2 65	5	0.083	500	500	500	500	500	300
	10	0.120	500	600	600	500	500	300
	40	0.203	500	1000	750	500	500	300
3 80	5	0.083	500	500	500	500	500	250
	10	0.120	500	600	600	500	500	300
	40	0.216	500	1000	750	500	500	300
4 100	5	0.083	400	400	400	400	400	200
	10	0.120	500	600	600	500	500	300
	40	0.237	500	1000	750	500	500	300
5 125	5	0.109	350	350	350	350	350	200
	10	0.134	450	500	500	450	500	300
	40	0.258	450	1000	750	500	500	300
6 150	5	0.109	350	350	350	350	350	200
	10	0.134	450	450	500	450	500	300
	40	0.280	450	1000	700	500	500	300
8 200	5	0.109	250	250	250	250	250	200
	10	0.148	300	300	300	300	400	250
	40	0.322	450	800	600	400	400	300
10 250	5	0.134	150	250	250	150	N/A	200
	10	0.165	300	300	300	233		200
	40	0.365	350	800	500	233		300
12 300	5	0.156	150	200	125	125	N/A	200
	10	0.180	300	300	300	175		200
	40	0.375	350	800	400	175		300
14 350	10	0.250	N/A	300	300	N/A	N/A	200
	20	0.312		300	300			250
	Std	0.375		350	350			300
16 400	10	0.250	N/A	300	300	N/A	N/A	200
	20	0.312		300	300			250
	Std	0.375		350	350			250
18 450	10	0.250	N/A	200	200	N/A	N/A	200
	20	0.312		300	350			250
	Std	0.375		300	350			300
20 500	10	0.250	N/A	200	200	N/A	N/A	200
	Std (20)	0.375		300	350			300
24 600	10	0.250	N/A	200	200	N/A	N/A	200
	Std (20)	0.375		350	350			250

a. Figure 716 Maximum Working Pressure based on larger pipe connection nominal pipe size.
* Maximum line pressure including surge to which a joint should be subjected on pipe roll groove to standard roll grooving specification with coupling properly assembled.

Grinnell

Working Pressure Ratings (Bar) on ISO Size Steel Pipe

(Page 1 of 2)

Tech Data Sheets: G810

Nominal Pipe Size ANSI Inches DN	Pipe O.D. mm	Pipe Wall Thickness mm	Fig. 705 Flexible Coupling	Fig. 707 Heavy Duty Flexible Coupling	Fig. 772 Rigid Coupling	Fig. 774 Grooved Rigid Coupling	Fig. 716a Flexible Reducing Coupling	Fig. 71 Flange
1 25	33,7	2,0	34	34	N/A	34	N/A	N/A
		2,8	34	52		34		
		3,4	34	69		34		
1-1/4 32	42,4	2,0	34	34	52	34	N/A	N/A
		2,8	34	52	52	34		
		3,6	34	69	52	34		
1-1/2 40	48,3	2,0	34	34	34	34	N/A	N/A
		2,8	34	52	52	34		
		3,7	34	69	52	34		
2 50	60,3	2,0	34	34	34	34	N/A	21
		2,8	34	52	52	34		21
		3,9	34	69	52	34		21
2-1/2 65	73	2,0	34	34	34	34	34	21
		3,0	34	41	41	34	34	21
		5,2	34	69	52	34	34	21
65	76,1	2,0	34	22	34	34	34	12
		3,0	34	34	41	34	34	19
		5,2	34	52	52	34	34	19
3 80	88,9	2,0	34	34	34	34	34	17
		3,0	34	41	41	34	34	21
		5,5	34	69	52	34	34	21
4 100	114,3	2,0	28	28	28	28	28	14
		3,0	34	41	41	34	34	21
		6,0	34	69	52	34	34	21
5 125	139,7	2,8	24	24	24	24	24	14
		3,4	31	34	34	31	34	21
		6,4	31	69	52	34	34	21
5 125	141,3	2,8	24	24	24	24	24	14
		3,4	31	34	34	31	34	21
		6,6	31	69	52	34	34	21
6 150	165,1	2,8	24	24	24	24	24	14
		3,4	31	31	34	31	34	21
		7,1	31	69	48	34	34	21
6 150	168,3	2,8	24	24	24	24	24	14
		3,4	31	31	34	31	34	21
		7,1	31	69	48	34	34	21

a. Figure 716 Maximum Working Pressure based on larger pipe connection nominal pipe size.
* Maximum line pressure including surge to which a joint should be subjected on pipe roll groove to standard roll grooving specification with coupling properly assembled.

Working Pressure Ratings (Bar) on ISO Size Steel Pipe

(Page 2 of 2)

Tech Data Sheets: G810

Nominal Pipe Size ANSI Inches DN	Pipe O.D. mm	Pipe Wall Thickness mm	Fig. 705 Flexible Coupling	Fig. 707 Heavy Duty Flexible Coupling	Fig. 772 Rigid Coupling	Fig. 774 Grooved Rigid Coupling	Fig. 716a Flexible Reducing Coupling	Fig. 71 Flange
8 200	219,1	2,8	17	17	17	17	17	14
		3,8	21	21	21	21	28	17
		8,2	31	55	41	28	28	21
10 250	273	3,4	10	17	17	10	N/A	14
		4,2	21	21	21	16		14
		9,3	24	55	34	16		21
12 300	323,9	4,0	10	14	9	9	N/A	14
		4,6	21	21	21	12		14
		9,5	24	55	28	12		21
14 350	355,6	6,4	N/A	21	21	N/A	N/A	14
		7,9		21	20			17
		9,5		24	24			21
16 400	406,4	6,4	N/A	21	21	N/A	N/A	14
		7,9		21	21			17
		9,5		24	24			17
18 450	457,2	6,4	N/A	14	14	N/A	N/A	14
		7,9		21	24			17
		9,5		21	24			21
20 500	508,0	6,4	N/A	14	14	N/A	N/A	14
		9,5		21	24			21
24 600	609,6	6,4	N/A	14	14	N/A	N/A	14
		9,5		24	24			17

a. Figure 716 Maximum Working Pressure based on larger pipe connection nominal pipe size.

* Maximum line pressure including surge to which a joint should be subjected on pipe roll groove to standard roll grooving specification with coupling properly assembled.

Grinnell

GRINNELL Mechanical Products

Stainless Steel Pipe per EN20217-7 316 Ti and EN10217-7 304L Design Data Pressure Rating

Tech Data Sheets: G815

Nominal Pipe Size ANSI Inches DN	Pipe O.D. mm	Pipe Wall Thickness mm	Fig. 705 Flexible Coupling	Fig. 707 Heavy Duty Flexible Coupling	Fig. 716[a] Flexible Reducing Coupling	Fig. 71 Flange	Fig. 772 Rigid Coupling	Fig. 774[b] Grooved Rigid Coupling	Fig. 405 Flexible Coupling	Fig. 472 Rigid Coupling
1 25	33,7	2,0	34	52	N/A	N/A	N/A	34	52	N/A
		2,8	34	52				34	52	
		3,4	34	52				34	52	
1-1/4 32	42,4	2,0	34	52	N/A	N/A	52	34	52	52
		2,8	34	52			52	34	52	52
		3,6	34	52			52	34	52	52
1-1/2 40	48,3	2,0	34	45	N/A	N/A	45	34	45	45
		2,8	34	45			52	34	45	52
		3,7	34	52			52	34	52	52
2 50	60,3	2,0	28	28	N/A	21	28	28	28	28
		2,8	34	34		21	52	34	34	52
		3,9	34	52		21	52	34	34	52
65	76,1	2,0	28	28	28	21	28	28	28	28
		3,0	28	34	28	21	34	28	34	34
		5,2	34	52	34	21	52	34	34	41
3 80	88,9	2,0	28	28	28	21	28	28	28	28
		3,0	28	34	28	21	34	28	34	34
		5,5	34	52	34	21	52	34	34	41
4 100	114,3	2,0	25	25	25	21	25	25	25	25
		3,0	28	34	28	21	34	28	28	28
		6,0	34	52	34	21	52	34	34	41
5 125	139,7	2,8	21	21	21	21	21	21	21	21
		3,4	24	34	24	21	34	24	24	24
		6,4	31	45	31	21	45	31	31	41
6 150	165,1	2,8	21	34	21	21	34	21	21	34
		3,4	21	34	21	21	34	21	21	34
		7,1	21	34	21	21	34	21	31	41
6 150	168,3	2,8	21	34	21	21	34	21	21	34
		3,4	21	34	21	21	34	21	21	34
		7,1	21	34	21	21	34	34	31	41
8 200	219,1	2,8	10	10	10	10	20	10	10	20
		3,8	14	21	14	14	21	14	14	21
		8,2	21	28	21	21	21	21	31	41
10 250	273	3,8	N/A	N/A	N/A	N/A	20	N/A	N/A	20
		4,2	5	9		5	21	5		21
		9,3	21	21		21	21	16		41
12 300	323,9	3.8	N/A	N/A	N/A	N/A	20	N/A	N/A	20
		4,6					20			20
		9,5	17	21		17	28	12		41

a. Figure 716 Maximum Working Pressure based on larger pipe connection nominal pipe size. Use only grooving machine rollers designed for stainless steel pipe.
b. Figure 774 is available in Europe, Middle East, and Africa only. Use only grooving machine rollers designed for stainless steel pipe.

Global Pipe Size Designations

GRINNELL Mechanical Products product data is utilised worldwide and all technical data is shown in both metric and imperial terms. The following chart shows a comparison between typical metric and IPS pipe sizes.

Nominal Size (DN)		Outside Diameter (OD)								
Inches (Imperial)	mm (Metric)	mm (Specification Reference)	DIN mm	BS mm	ISO mm	JIS mm	ANSI Inches	GB China mm	India	
									IS 1239	IS3589
½	15	21.3mm	DN 15	DN 15	DN 15	21.7mm	½	DN 15	DN 15	–
¾	20	26.7mm	26.9mm	DN 20	DN 20	27.2mm	¾	DN 20	DN 20	–
1	25	33.4mm	33.7mm	DN 25	DN 25	34mm	1	DN 25	DN 25	–
1¼	32	42.2mm	42.4mm	DN 32	DN 32	42.7mm	1¼	DN 32	DN 32	–
1½	40	48.3mm	DN 40	DN 40	DN 40	48.6mm	1½	DN 40	DN 40	–
2	50	60.3mm	DN 50	DN 50	DN 50	60.5mm	2	DN 50	DN 50	–
2½	65	73.1mm	–	–	–	–	2½	–	–	–
		76.1mm BS/ISO	76.1mm	76.1mm	76.1mm	76.3mm	–	76.1mm **	76.1mm	–
3	80	88.9mm	DN 80	DN 80	DN 80	DN 80	3	DN 80	DN 80	–
3½	90	101.6mm	–	–	–	–	–	–	–	–
4	100	108mm China (& old DIN)	DIN 133mm	–	–	–	–	108mm **	–	–
		114.3mm	DN 100	DN 100	DN 101	DN 100	4	DN 100	DN 100	–
–	127mm	127mm	–	–	–	–	–	–	–	–
5	125	133mm China	–	–	–	–	–	133mm **	–	–
		139.7mm BS/ISO	DN 125	139.7mm	139.7mm	139.8mm	–	139.7mm	139.7mm	–
		141.3mm	–	–	–	–	5	–	–	–
–	152.4mm	152.4mm	–	–	–	–	–	–	–	–
6	150	159mm China	–	–	–	–	–	159mm	–	
		165.1mm JIS/BS	–	165.1mm	–	165.2mm	–	–	165.1mm	–
		168.3mm	DN 150	–	DN 150	–	6	DN 150	–	DN 150
–	175	193.7mm	–	–	–	–	–	–	–	193.7mm
–	203.2mm	203.2mm	–	–	–	–	–	–	–	–
8	200	216.3mm JIS	–	–	–	216.3mm	–	–	–	–
		219.1mm	DN 200	DN 200	DN 200	–	8	DN 200	DN 200	DN 200
–	254mm	254mm	–	–	–	–	–	–	–	–
10	250	267.4mm JIS	–	–	–	267.4mm	–	–	–	–
		273mm	DN 250	DN 250	DN 250	–	10	DN 250	DN 250	DN 250
–	304.8mm	304.8mm	–	–	–	–	–	–	–	–
12	300	318.5mm JIS	–	–	–	318.5mm	–	–	–	–
		323.9mm	DN 300	DN 300	DN 300	–	12	–	–	–
14	350	355.6mm	DN 350	DN 350	DN 350	DN 350	14	DN 350	–	–
		377mm China	–	–	–	–	–	377mm	–	–
16	400	406.4mm	DN 400	DN 400	DN 400	DN 400	16	DN 400	–	–
		426mm China	–	–	–	–	–	426mm	–	–
18	450	457.2mm	DN 450	DN 450	DN 450	DN 450	18	DN 450	–	–
		480mm China	–	–	–	–	–	480mm	–	–
20	500	508mm	DN 500	DN 500	DN 500	DN 500	20	DN 500	–	–
		530mm China	–	–	–	–	–	530mm	–	–
22	550	558.8mm	–	–	–	DN 550	22	559mm	–	–
		580mm China	–	–	–	–	–	580mm	–	–
24	600	610mm	DN 600	DN 600	DN 600	DN 600	24	DN 600	–	–
		630mm China	–	–	–	–	–	630mm	–	–

IMPORTANT NOTE:

Nominal designations are used where the actual OD of the pipe matches the ANSI size.
Otherwise both the nominal and actual OD are listed.

China sizes are listed as actual OD in mm.

** China sizes are tubing sizes.

Flange Drilling Specifications

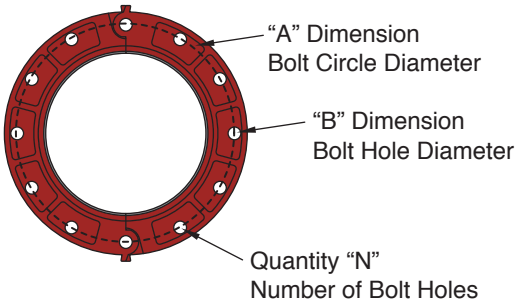

Valve Size		ANSI B16.1 (Class 125#) [1]			ISO 2084 (PN10) [2]			ISO 2084 (PN16) [3]		
		Dimensions - mm *Inches*								
Nominal mm *Inches*	O.D. mm *Inches*	A	B	Qty. N	A	B	Qty. N	A	B	Qty. N
50	60.3	120.6	19.0	4	125.0	18.0	4	125.0	18.0	4
2	*2.375*	*4.75*	*0.75*		*4.92*	*0.71*		*4.92*	*0.71*	
65	73.0	139.7	19.0	4	145.0	18.0	4	145.0	18.0	4
2½	*2.875*	*5.50*	*0.75*		*5.71*	*0.71*		*5.71*	*0.71*	
80	88.9	152.4	19.0	4	160.0	18.0	8	160.0	18.0	8
3	*3.500*	*6.00*	*0.75*		*6.30*	*0.71*		*6.30*	*0.71*	
100	114.3	190.5	19.1	8	180.0	18.0	8	180.0	18.0	8
4	*4.500*	*7.50*	*0.75*		*7.09*	*0.71*		*7.09*	*0.71*	
125	141.3	215.9	22.4	8	210.0	18.0	8	210.0	18.0	8
5	*5.563*	*8.50*	*0.88*		*8.27*	*0.71*		*8.27*	*0.71*	
150	168.3	241.3	22.4	8	240.0	22.0	8	240.0	22.0	8
6	*6.625*	*9.50*	*0.88*		*9.45*	*0.87*		*9.45*	*0.87*	
200	219.1	298.5	22.2	8	295.0	22.0	8	295.0	22.0	12
8	*8.625*	*11.75*	*0.88*		*11.61*	*0.87*		*11.61*	*0.87*	
250	273.0	362.0	25.4	12	350.0	22.0	12	355.0	26.0	12
10	*10.750*	*14.25*	*1.00*		*13.78*	*0.87*		*13.98*	*1.02*	
300	323.9	431.8	25.4	12	400.0	22.0	12	410.0	26.0	12
12	*12.750*	*17.00*	*1.00*		*15.75*	*0.87*		*16.14*	*1.02*	
350	355.6	476.5	28.4	12	460.0	22.0	16	470.0	26.0	16
14	*14.000*	*18.76*	*1.12*		*18.11*	*0.87*		*18.50*	*1.02*	
400	406.4	539.8	28.4	16	515.0	26.0	16	525.0	30.0	16
16	*16.000*	*21.25*	*1.12*		*20.28*	*1.02*		*20.67*	*1.18*	
450	457.2	577.9	31.8	16	565.0	26.0	20	585.0	30.0	20
18	*18.000*	*22.75*	*1.25*		*22.24*	*1.02*		*23.03*	*1.18*	
500	508.0	635.0	31.8	20	620.0	26.0	20	650.0	33.0	20
20	*20.000*	*25.00*	*1.25*		*24.41*	*1.02*		*25.59*	*1.30*	
600	609.6	749.3	35.1	20	725.0	30.0	20	770.0	36.0	20
24	*24.000*	*29.50*	*1.38*		*28.54*	*1.18*		*30.31*	*1.42*	

1 Same drilling as for B16.5 (Class 150#) and B16.42 (Class 250#).
2 Same drilling as for BS 4504 Section 3.2 (PN10) and DIN 2532 (PN10).
3 Same drilling as for BS 4504 Section 3.2 (PN16) and DIN 2532 (PN16).
For additional information, contact a GRINNELL Sales Representative.

Metric/Imperial Conversion Chart

This chart is provided as a guide for converting metric and imperial measurements.

Convert Metric to Imperial				Convert Imperial to Metric		
Millimetres (mm)	X	*0.03937*		*Inches (in)*	X	**25.4**
Metres (m)	X	*3.281*		*Feet (ft)*	X	**0.3048**
Kilogrammes (kg)	X	*2.205*		*Pounds (lb)*	X	**0.4536**
Grammes (g)	X	*0.03527*		*Ounces (oz)*	X	**28.35**
Kilopascals (kPa)	X	*0.145*		*Pressure (psi)*	X	**6.894**
Bar	X	*14.5*		*Pressure (psi)*	X	**0.069**
Newtons (N)	X	*0.2248*		*End Load (lb)*	X	**4.45**
Newton Metres (N•m)	X	*0.738*		*Torque (lbft)*	X	**1.356**
Celsius (°C)		*(C + 17.78) × 1.8*		*Temp. (°F)*		**(F – 32) ÷ 1.8**
Watts (w)	X	*1.341 × 10-3*		*Horsepower (hp)*	X	**745.7**
Litres per min. (L/M)	X	*0.2642*		*Gal. per Min. (gpm)*	X	**3.785**
Cubic Metres per min. (m3/m)	X	*264.2*		*10^{-3} Gal. per Min. (gpm)*	X	**3.7865**

Typical General Specification

(CSI - Div. 15, Section A Info., Methods, & Instructions)

Section 1 - Grooved Piping Method

GRINNELL grooved pipe couplings, grooved end fittings, grooved end butterfly and check valves, and other system components as manufactured or supplied by GRINNELL Mechanical Products shall be used to install piping systems and make mechanical equipment connections in systems within specified operating conditions and working pressures as shown in the coupling manufacturer's product specification. GRINNELL grooved pipe couplings shall be used for the following systems (subject to applicable local code approval).

Heating / Air Conditioning

Chilled Water
Hot Water
Condenser
Water Heating
Cooling Tower
Dual Temperature
Machinery Room
Utility Water

Plumbing

Domestic Hot Water
Domestic Cold Water
Roof Drains/Storm Drains

Other

Vacuum
Lubrication
Air
Pneumatic Conveyor
Elevator Hydraulic
Low Temperature

Typical Guide Specification

Basic Materials & Methods (CSI - Div. 15 Section 15050)

Section 1 - Materials - Pipe & Pipe Fittings

1.1 Pipe - Pipe shall conform to GRINNELL published tolerance specifications. Steel pipe shall be black or galvanised, conforming to ASTM A-135, A-795 or A-53.

1.2 Couplings - Couplings shall be GRINNELL Figures 705, 707, 772 and 716 cast in ductile iron as specified in ASTM A-536. Couplings shall have nuts and bolts. Couplings shall be coated with a lead free paint as standard, or hot-dipped galvanised in accordance with ASTM A-153 as an option. Couplings shall be GRINNELL Figures 405 and 472 cast in Stainless Steel as specified in ASTM A-743/A-743M. Couplings shall have nuts and bolts.

1.2.1 Gaskets - Gaskets shall be a pressure responsive design, moulded of synthetic elastomer as designated by ASTM D-2000, and shall conform to the coupling housing and pipe outside diameter. Reference shall be made to the latest published GRINNELL gasket selection guide for proper gasket selection for the intended service.

1.2.1.1 Water Service - Gasket shall be Grade "E" EPDM with green colour code identification, for service temperatures from - 34°C to 110°C (*-30°F to 230°F*). Recommended for hot water not to exceed 110°C (*230°F*), plus a variety of dilute acids, oil free air and many chemical services. Not recommended for petroleum services or steam.

1.2.1.2 Oil Service - Gasket shall be grade "T" Nitrile with orange colour code identification, for service temperatures from -29°C to 82°C (*-20°F to 180°F*). Recommended for petroleum products, vegetable oils, mineral oils, and air with oil vapours

1.2.1.3 Other Services - Refer to the latest published GRINNELL gasket selection guide for other service recommendations.

1.2.2 Bolts and Nuts - Shall be heat treated carbon steel, ovalneck track head bolts and heavy hex nuts, conforming to the physical properties of ASTM A-183 with a minimum tensile strength of 7584 Bar (*110,000 psi*). Bolts and nuts shall be zinc electroplated.

1.3 Flanges - Shall be GRINNELL Figure 71 Flange, casting in ductile iron in accordance with ASTM A-536. Flange shall conform to ANSI Class 125 and 150 bolt patterns and shall be coated with a lead-free paint as standard, or hot dipped galvanised in accordance to ASTM A-153.

1.4 Fittings - Shall be ASTM A-536 ductile iron or fabricated from steel pipe, 32mm - 600mm (*1 ¼" - 24"*). All fittings shall be coated with a lead-free paint as standard, or hot-dipped galvanised as an option in accordance to ASTM A-153.

1.5 Branch Outlets - Shall be GRINNELL Figure 730 mechanical tees or crosses with integral gasket. Figure 730 shall be coated with a lead-free paint as standard, or hot-dipped galvanised as an option.

1.6 Butterfly Valves - Shall be with grooved ends. Valves shall have encapsulated Grade "E" EPDM or Grade "T" Nitrile disc and rated at 20.7 Bar (*300 psi*) bubble-tight-shut-off. Reference shall be ma1100de to the latest published GRINNELL gasket selection guide for proper disc seal selection for the intended service. Valve bodies shall be ductile iron, and upper stems shall be stainless steel.

1.7 Check Valves - Shall be with grooved ends. Valves shall have a resilient elastomer seal Grade "E" EPDM or Grade "T" Nitrile and rated at 20.7 Bar (*300 psi*). Reference shall be made to the latest published GRINNELL gasket selection guide for proper seal selection for the intended service. Valve bodies shall be ductile iron with a nickel seat. The caps shall be ductile iron with an attached stainless steel clapper assembly for 60.3mm - 219.1mm (*2" - 8"*) and a ductile iron clapper assembly for 273.0mm - 323.9mm (*10" - 12"*). All bodies and caps shall be coated with a lead-free paint as standard.

Section 2 - Materials - Pipe Preparation

Pipe shall be prepared according to GRINNELL published specifications, ANSI/AWWA C-606, or other applicable standards.

2.1 Pipe Ends - Shall be clean and free from indentations, projections, burrs, rust or roll marks in the area from pipe end to groove.

2.1.1 Standard Weight Pipe - Shall be roll grooved without removing metal, or cut grooved in accordance with GRINNELL published standard roll groove or standard cut groove specifications.

2.1.2 Lightwall Pipe - Shall be roll grooved without metal removal in accordance with GRINNELL published standard roll groove specifications.

SECTION 3 - ASSEMBLY

3.1 GRINNELL couplings, fittings, flanges and valves shall be assembled in accordance with instructions published by GRINNELL Mechanical Products.

3.1.1 Pipe - Ends shall be clean and free from indentations, projections, burrs, roll marks, etc., in the area from pipe end to groove. Pipe ends shall be square cut and prepared in accordance with standard GRINNELL specifications.

3.1.2 Gasket - Shall be of pressure responsive design verified as proper style and grade suitable for the intended service as published in the latest GRINNELL gasket recommendation technical literature.

3.1.3 Lubrication - A thin, uniform coat of GRINNELL lubricant shall be applied to the entire exterior of the gasket, including the gasket lips. Complete lubrication is essential to prevent gasket pinching and to ease installation and alignment. Petroleum-free silicone gasket lubricant is recommended when gaskets are subject to low temperature conditions. Petroleum lubricants shall not be used for EPDM gaskets.

SECTION 4 - SUPPORT

4.1 Horizontal Piping: (Contact GRINNELL Mechanical Products for support recommendations)

4.1.1 Flexible Connections - No pipe length shall be left unsupported between any two couplings, nor shall any pipe be left unsupported whenever a change in direction of line flow takes place. Supports shall meet the requirements stated above, but in no case shall the distance between supports exceed the following for systems where linear movement is not required:

Distance Between Supports	
Nominal Size mm *Inches*	**Span Metres** *Feet*
42.4 - 48.3	**3.7**
1 ¼ - 1 ½	*12*
60.3 - 219.1	**4.6**
2 - 8	*15*
273.0 - 323.9	**4.9**
10 - 12	*16*
355.6 - 406.4	**5.5**
14 - 16	*18*
457.2 - 609.6	**6.1**
18 - 24	*20*
Note: The requirements of ANSI, ASME or other code groups may require additional supports.	

4.1.2 Rigid Connections - Pipe connections formed with the Figure 772 shall be supported in accordance with applicable ANSI B31.1, Power Piping Code; ANSI B31.9, Building Service Pipe Code.

Typical Specifications

Building Service Systems - Plumbing

Plumbing Specifications (CSI - Div. 15 Section 15-E Plumbing)

SECTION 1 - DOMESTIC WATER SYSTEMS

(CSI - Div. 15, Section 15-E Water Supply Systems) GRINNELL Mechanical Grooved Pipe couplings, fittings and butterfly valves as manufactured or supplied by GRINNELL Mechanical Products shall be used for all water supply systems under operating conditions not to exceed 110°C (*230°F*) temperature. The coupling gasket and encapsulated disc on butterfly valves shall be Grade "E" EPDM.

1.1 Materials:

1.1.1 Pipe - Pipe shall be galvanised steel pipe, conforming to ASTM A-135, A-795 or A-53. All pipe shall be prepared according to GRINNELL published specifications, or to ANSI/AWWA C-606 grooved end pipe. Pipe ends shall be prepared as detailed in Basic Materials and Methods and to the latest GRINNELL published specifications.

1.1.2 Couplings - All GRINNELL grooved couplings and fittings shall be painted or galvanised Figure 705, 707, 772 or 716 with Grade "E" EPDM gaskets and zinc plated bolts and nuts.

1.1.3 Branch Connections - Shall be made with Figure 730 and/or Figure 522.

1.1.4 Flange Connections - Flange connections shall be GRINNELL Figure 71 Flanges incorporating Grade "E" EPDM gasket.

1.1.5 Fittings - Fittings shall be painted or galvanised GRINNELL standard ductile iron or segmentally welded steel fittings, with grooved ends.

1.1.6 Butterfly Valves - Shall be of grooved end design with a Grade "E" EPDM encapsulated disc. Upper stem shall be stainless steel. Valves shall have pressure assisted double seal and be capable of 300 psi, bubble-tight-shutoff. Butterfly valves shall be with gear actuator or hand lever. Operating conditions not to exceed -34°C to 110°C (*-30°F to 230°F*).

1.1.7 Check Valves - Shall be of grooved end design with a clapper seal of Grade "E" EPDM. Valves shall be capable of pressures of 300 psi. The valves shall have a spring loaded clapper to ensure a leak tight seal and a nonsticking operation. The clapper seat in the valve body shall be nickel. Operating conditions not to exceed -34°C to 110°C (*-30°F to 230°F*).

SECTION 2 - STORM DRAINS / ROOF DRAINS

GRINNELL mechanical grooved pipe couplings and fittings as manufactured by GRINNELL Mechanical Products shall be used for all storm and roof drainage systems.

2.1 Materials:

2.1.1 Pipe - Pipe shall be galvanised steel pipe, conforming to ASTM A-135, A-795 or A-53. All pipe shall be prepared according to GRINNELL published specifications, or to ANSI/AWWA grooved end pipe. Pipe ends shall be prepared as detailed in Basic Materials and Methods and to the latest GRINNELL published specifications.

2.1.2 Couplings - Couplings shall be galvanised Figure 705, 707, 772 or 716 with Grade "E" EPDM gaskets and zinc plated bolts and nuts.

2.1.3 Flange Connections - Flange connections shall be galvanised GRINNELL Figure 71 Flanges incorporating Grade "E" EPDM gasket.

2.1.4 Fittings - Fittings shall be galvanised GRINNELL standard ductile iron or segmentally welded steel fittings, with grooved ends.

2.2 Plastic Pipe Systems

2.2.1 Pipe - Pipe with material and dimensions conforming to ASTM D-1785 Type 1, Grade 1 with cut grooves and joint pressure ratings conforming to grooved manufacturer's specifications or recommendations; or Type 2, Grade 1 with rolled or radius cut grooves and joint ratings conforming to grooved manufacturer's specifications and recommendations.

2.2.2 Couplings - Flexible type couplings shall be used.

2.2.3 Flange Connections - Same as in 2.1.3

2.2.4 Fittings - Same as in 2.1.4

SECTION 3 - VENT PIPING

(Same as in Section 2 - Storm Drains / Roof Drains)

Typical Specifications

Building Service Systems - Cooling

Cooling System Specifications (CSI - Div. 15 Section 15-N Refrigeration Systems)

SECTION 1 - CHILLED WATER - SUPPLY & RETURN

GRINNELL Mechanical Grooved Pipe couplings, fittings and butterfly and check valves as manufactured or supplied by GRINNELL Mechanical Products shall be used for cooling system chilled water piping, including risers, mains, equipment connection, branches, supply and return lines under operating conditions not to exceed -34°C to 110°C (*-30°F to 230°F*) temperature. Calculations shall be made based on coupling manufacturers latest literature to determine expansion/ contraction allowance available, enabling elimination of special movement compensators, swing joints, flexible connections and vibration isolators where possible.

1.1 Materials:

1.1.1 Pipe - Shall be steel pipe, conforming to ASTM A-135, A-795 or A-53. All pipe shall be prepared according to GRINNELL published specifications, or to ANSI/AWWA C-606 grooved end pipe. Pipe ends shall be prepared as detailed in Basic Materials and Methods.

1.1.2 Couplings - All flexible couplings shall be GRINNELL Figure 705 and 707 with Grade "E" EPDM gaskets and zinc plated bolts and nuts. All rigid couplings shall be GRINNELL Figure 772 with Grade "E" EPDM gaskets and zinc plated bolts and nuts.

1.1.3 Branch Connections - Branch stub-in connections shall be made with Figure 730 with Grade "E" EPDM gaskets and zinc plated bolts and nuts.

1.1.4 Flange Connections - Shall be GRINNELL Figure 71 Flange incorporating Grade "E" EPDM gasket.

1.1.5 Fittings - Shall be GRINNELL ductile iron or segmentally welded steel fittings, with grooved ends.

1.1.6 Butterfly Valves - Shall be of grooved end design with EPDM encapsulated disc. Neck design shall readily accommodate insulation. Valves shall have pressure assisted double seal and stainless steel upper stems, and be capable of 20.7 Bar (*300 psi*), bubble-tight-shut-off, with an actuator or hand lever.

1.1.7 Check Valves - Shall be of grooved end design with a clapper seal of EPDM. The valves shall have a spring loaded clapper to ensure a leak tight seal and a non-sticking operation. The clapper seat in the valve body shall be nickel. Valves shall be capable of pressures of 20.7 Bar (*300 psi*).

SECTION 2 - COOLING TOWER PIPING

Same as Section 1, except pipe, couplings and fittings shall be galvanised.

SECTION 3 - DUAL TEMPERATURE SYSTEMS PIPING

Same as Section 1.

SECTION 4 - CONDENSER WATER PIPING

Same as Section 1.

Typical Specifications

Building Service Systems - Heating

Heating System Specifications (CSI - Div. 15 Section 15-L Water Piping)

SECTION 1 - HOT WATER HEATING SYSTEMS - SUPPLY & RETURN

GRINNELL Mechanical Grooved Pipe couplings, fittings and butterfly and check valves as manufactured or supplied by GRINNELL Mechanical Products shall be used for hot water systems , including boiler manifolds, mains, risers, branches, supply and return lines, under operating conditions not to exceed 110°C (*230°F*). Calculations shall be based on coupling manufacturers latest literature to determine expansion allowance available, enabling elimination of special expansion compensators, swing joints, flexible connections and vibration isolators where possible.

1.1 Materials:

1.1.1 Pipe - Shall be steel pipe, conforming to ASTM A-135, A-795 or A-53. All pipe shall be prepared according to GRINNELL published specifications, or to ANSI/AWWA C-606 grooved end pipe. Pipe ends shall be prepared as detailed in Basic Materials and Methods.

1.1.2 Couplings - All flexible couplings shall be GRINNELL Figure 705 and 707 with Grade "E" EPDM gaskets and zinc plated bolts and nuts. All rigid couplings shall be GRINNELL Figure 772 with Grade "E" EPDM gaskets and zinc plated bolts and nuts. All reducing couplings shall be GRINNELL Figure 716 with Grade "E" EPDM gaskets and zinc plated bolts and nuts.

1.1.3 Branch Connections - Branch stub-in connections shall be made with GRINNELL Figure 730 with Grade "E" EPDM gaskets and zinc plated bolts and nuts.

1.1.4 Flange Connections - Flange connections shall be GRINNELL Figure 71 Flange incorporating Grade "E" EPDM gasket.

1.1.5 Fittings - Fittings shall be GRINNELL ductile iron or segmentally welded steel fittings, with grooved ends.

1.1.6 Butterfly Valves - Shall be of grooved end design with EPDM encapsulated disc. Neck design shall readily accommodate insulation. Valves shall have pressure assisted double seal and stainless steel upper stems, and be capable of 20.7 Bar (*300 psi*), bubble-tight-shut-off, with an actuator or hand lever.

1.1.7 Check Valves - Shall be of grooved end design with a clapper seal of EPDM. The valves shall have a spring loaded clapper to ensure a leak tight seal and a nonsticking operation. Valves shall be capable of pressures of 20.7 Bar (*300 psi*).