PREPARATION EQUIPMENT

Preparation Equipment Pictorial Table of Contents

Pipe Preparation Tools

Figure GROOVER 01

Figure GROOVER 02

Figure GROOVER 10A

Part Number	Nominal Size mm *In.*	Power Supply*	Description	Approx. Weight kg *Lbs*
GROOVER 01	42.4mm thru 457.2mm *1¼ thru 18*	380VAC 50Hz	Portable Groover with Pipestand	207 *456.4*
GROOVER 02	42.4mm thru 457.2mm *1¼ thru 18*	380VAC 50Hz	Automatic Groover with Pipestand	297 *654.8*
GROOVER 10A	33.7mm thru 219.1mm *1 thru 8*	220VAC 50Hz	Portable Groover with Pipestand	107 *235.9*
GRO010A-UK	33.7mm thru 219.1mm *1 thru 8*	110VAC 50Hz	Portable Groover with Pipestand	107 *235.9*

*Note: Other voltages on request.

Pipe Stands

Figure STAND

Figure RJ-624

Part Number	Description	Size Range mm *In.*	Approx. Weight kg *Lbs*
STAND	Pipestand for pipes	33.7mm thru 219.1mm *1" thru 8"*	15 *33.1*
RJ-624	Pipestand for pipes	168.3mm thru 609.6mm *6" thru 24"*	40 *88.2*

Figure HCTOOL Hole Cutting Tool

Figure HCTOOL
(Drill not included)

Part Number	Pipe Size mm *In.*	Max. Hole Ø Supply mm *In.*	Description	Approx Weight Kg
HCTOOL	21.0 - 273.0	125	Hole cutting Tool	8.0
	½ - 10	*5*		17.6

Note: The HCT Hole Cutting Tool is a great help when drilling holes in pipe. Almost any standard hole saw machine [i.e. electric drill] can be mounted on the HCT. With the HCT the hole saw can be fixed, secured and used as a leveling tool to ensure accurate hole alignment. For pipes of 12mm thru 250mm (*½"thru 12"*).

With the optional base and beam adapter, the support can also be attached to standard steel beams.

Hole Cutting Tool Spare Parts

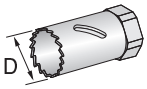

Figure HOLESAW
(Available sizes show in table)

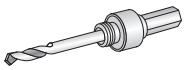

Figure HOLESAWCP
(For dia. 14.3mm thru 30.2mm)
(0.56" thru 1.19")

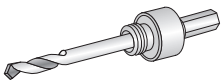

Figure HOLESAWCP5
(For dia. 31.8mm thru 152.4mm)
(1.25" thru 6.00")

Figure HOLESAWDP
(Drive plate for dia. 76.2mm thru 152.4mm)
(3.00" thru 6.00")

Figure HOLESAWCD
(Spare drill for HOLESAWCP & HOLESAWCP5)

Part Number	D mm *In.*	Use with Hole Drill	Use with Drive Plate
HOLESAW22	22.2	HOLESAWCP	–
	0.87		
HOLESAW24	23.8	HOLESAWCP	–
	0.94		
HOLESAW25	25.4	HOLESAWCP	–
	1.00		
HOLESAW35	34.9	HOLESAWCP5	–
	1.37		
HOLESAW38	38.1	HOLESAWCP5	–
	1.50		
HOLESAW44	44.5	HOLESAWCP5	–
	1.75		
HOLESAW50	50.8	HOLESAWCP5	–
	2.00		
HOLESAW63	63.5	HOLESAWCP5	–
	2.50		
HOLESAW70	69.9	HOLESAWCP5	–
	2.75		
HOLESAW89	88.9	HOLESAWCP5	HOLESAWDP
	3.50		
HOLESAW114	114.3	HOLESAWCP5	HOLESAWDP
	4.50		

GRINNELL Groove Measurement Tapes

This dimensional measurement tape has been developed to check the groove diameter (C-size) of grooved pipe from 33.7mm up to 609,6mm (*1" up to 24"*).

The loop extending from the metal housing consist of a clear-view plastic window with an indicator line and a metal measuring tape. Through the window one can see the various markings (groove tolerance areas) on the tape.

First, verify which size pipe is to be checked. As shown on the drawing, the metal tape will show the diameter of a particular steel pipe size. Slide the loop over the grooved end of the pipe and place the tape in the groove.

Please note: Check whether the tape is placed in the groove over the entire circumference of the pipe!

Pull the tape tightly on the pipe. Through the clear view window one should see the indicator line and a small 'block' showing the tolerance area for the groove. The indicator line in the window must fall within the dark coloured block or groove tolerance area.

If the indicator line is not within the groove tolerance area, first check if the tape is pulled back tightly, and whether the tape is correctly placed in the groove. If the tape is placed properly, this particular groove is not correct. Make sure that the settings on the GRINNELL grooving tool are corrected to obtain the correct groove dimensions.

Please note:

This tape is not a calibrated tool and is to be used for reference only. To ensure accuracy, always check grooved end pipe with calibrated gauges or calibers.

For Roll Groove Standard Specifications for Steel Pipe and Other IPS Pipe, refer to Data Sheet TFP1898.

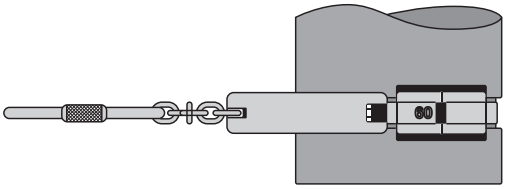

Part Number	Pipe Size mm *In.*	Description Hole Drill	Use with Drive Plate
GRINTAPE	33.7 – 323.9 *1 – 12*	Pipe Measuring Tape	0.100
ZKLM024	33.7 – 609.6 *1 – 24*	Pipe Measuring Tape	0.100

Figure PUNCH Centre Punch

Part Number	Description
PUNCH	Centre Punch

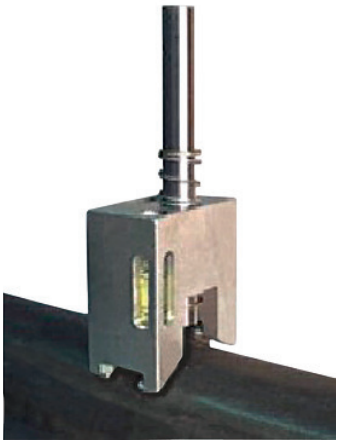

GRINNELL Gauges

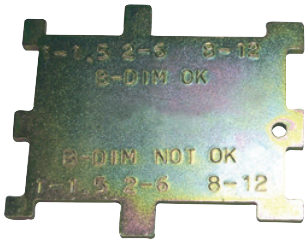

This dimensional gauge is developed to check the A dimension (gasket seat) and B dimension (groove width) of grooved pipe.

A Dimension - Gasket seat

Select the proper size of pipe on the gauge. Place the gauge with the DIM A OK side on the grooved end of the pipe as shown on the drawing. If the gauge fits the groove should be acceptable. If the DIM A NOT OK side fits the grooved end, this groove is not made in accordance with GRINNELL specifications.

B Dimension - Groove width

Select the proper size of the pipe on the gauge. Place the gauge with the DIM B OK side in the groove of the pipe as shown on the drawing. If the gauge fits, the groove should be acceptable. If the DIM B NOT OK side fits the groove, this groove is not made in accordance with GRINNELL specifications.

Please note: This gauge is not a calibrated tool and is to be used for reference only. To ensure accuracy, always check grooved end pipe with calibrated gauges or calibers.

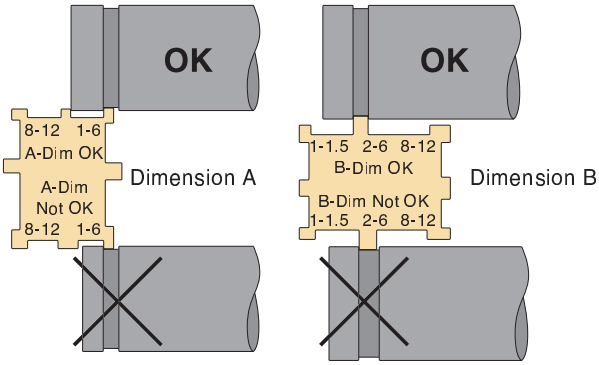

Part Number	Pipe Size mm In.	Description Hole Drill	Use with Drive Plate
GAUGE	33.7 – 323.9 1 – 12	Gauge	0.250

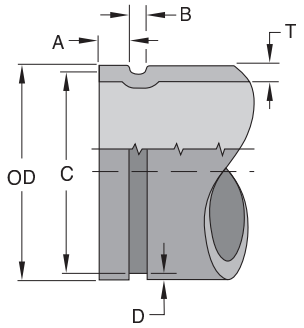

Roll Groove Standard Specification for Steel & Other IPS Pipe

Tech Data Sheet: TFP1898

Nominal Pipe Size mm *Inches*	Pipe O.D. mm *Inches*			A ±0.030" *±0,76mm* mm *Inches*	B ±0.030" *±0,76mm* mm *Inches*	C Groove Diameter mm *Inches*		D Groove Depth (ref. only) mm *Inches*	T Minimum Wall mm *Inches*	Maximum Allow Flare Diameter mm *Inches*
	O.D.	Tolerance +	Tolerance -			Actual	Tol. +0.000			
25	**33.4**	**0.33**	**0.33**	**15.88**	**7.14**	**30.23**	**-0.38**	**1.60**	**1.65**	**36.32**
1	*1.315*	*0.013*	*0.013*	*0.625*	*0.281*	*1.190*	*-0.015*	*0.063*	*0.065*	*1.743*
32	**42.4**	**0.41**	**0.41**	**15.88**	**7.14**	**38.99**	**-0.38**	**1.60**	**1.65**	**44.96**
1¼	*1.660*	*0.016*	*0.016*	*0.625*	*0.281*	*1.535*	*-0.015*	*0.062*	*0.065*	*1.77*
40	**48.3**	**0.48**	**0.48**	**15.88**	**7.14**	**45.09**	**-0.38**	**1.60**	**1.65**	**51.05**
1½	*1.900*	*0.019*	*0.019*	*0.625*	*0.281*	*1.775*	*-0.015*	*0.062*	*0.065*	*2.01*
50	**60.3**	**0.61**	**0.61**	**15.88**	**8.74**	**57.15**	**-0.38**	**1.60**	**1.65**	**62.99**
2	*2.375*	*0.024*	*0.024*	*0.625*	*0.344*	*2.250*	*-0.015*	*0.062*	*0.065*	*2.48*
65	**73.0**	**0.74**	**0.74**	**15.88**	**8.74**	**69.09**	**-0.46**	**1.98**	**2.11**	**75.69**
2½	*2.875*	*0.029*	*0.029*	*0.625*	*0.344*	*2.720*	*-0.018*	*0.078*	*0.083*	*2.98*
65	**76.1**	**0.76**	**0.76**	**15.88**	**8.74**	**72.26**	**-0.46**	**1.93**	**2.11**	**78.74**
76,1mm	*3.000*	*0.030*	*0.030*	*0.625*	*0.344*	*2.845*	*-0.018*	*0.076*	*0.083*	*3.10*
80	**88.9**	**0.89**	**0.79**	**15.88**	**8.74**	**84.94**	**-0.46**	**1.98**	**2.11**	**91.44**
3	*3.500*	*0.035*	*0.031*	*0.625*	*0.344*	*3.344*	*-0.018*	*0.078*	*0.083*	*3.60*
100	**108.0**	**1.09**	**0.79**	**15.88**	**8.74**	**103.73**	**-0.51**	**2.11**	**2.11**	**110.49**
108.0mm	*4.252*	*0.043*	*0.031*	*0.625*	*0.344*	*4.084*	*-0.020*	*0.083*	*0.083*	*4.35*
100	**114.3**	**1.14**	**0.79**	**15.88**	**8.74**	**110.08**	**-0.51**	**2.11**	**2.11**	**116.84**
4	*4.500*	*0.045*	*0.031*	*0.625*	*0.344*	*4.334*	*-0.020*	*0.083*	*0.083*	*4.60*
125	**133.0**	**1.35**	**0.79**	**15.88**	**8.74**	**129.13**	**-0.56**	**2.11**	**2.77**	**135.89**
133.0mm	*5.236*	*0.053*	*0.031*	*0.625*	*0.344*	*5.084*	*-0.022*	*0.083*	*0.109*	*5.35*
125	**139.7**	**1.42**	**0.79**	**15.88**	**8.74**	**135.48**	**-0.56**	**2.11**	**2.77**	**142.24**
139,7mm	*5.500*	*0.056*	*0.031*	*0.625*	*0.344*	*5.334*	*-0.022*	*0.083*	*0.109*	*5.60*
125	**141.3**	**1.42**	**0.79**	**15.88**	**8.74**	**137.03**	**-0.56**	**2.13**	**2.77**	**143.76**
5	*5.563*	*0.056*	*0.031*	*0.625*	*0.344*	*5.395*	*-0.022*	*0.084*	*0.109*	*5.66*
150	**159.0**	**1.60**	**0.79**	**15.88**	**8.74**	**154.53**	**-0.76**	**2.11**	**2.77**	**161.29**
159.0mm	*6.260*	*0.063*	*0.031*	*0.625*	*0.344*	*6.084*	*-0.030*	*0.083*	*0.109*	*6.35*
150	**165.1**	**1.60**	**0.79**	**15.88**	**8.74**	**160.78**	**-0.56**	**2.16**	**2.77**	**167.64**
165,1mm	*6.500*	*0.063*	*0.031*	*0.625*	*0.344*	*6.330*	*-0.022*	*0.085*	*0.109*	*6.60*
150	**168.3**	**1.60**	**0.79**	**15.88**	**8.74**	**163.96**	**-0.56**	**2.16**	**2.77**	**170.94**
6	*6.625*	*0.063*	*0.031*	*0.625*	*0.344*	*6.455*	*-0.022*	*0.085*	*0.109*	*6.73*
200	**219.1**	**1.60**	**0.79**	**19.05**	**11.91**	**214.40**	**-0.64**	**2.34**	**2.77**	**223.52**
8	*8.625*	*0.063*	*0.031*	*0.750*	*0.469*	*8.441*	*-0.025*	*0.092*	*0.109*	*8.80*
250	**273.0**	**1.60**	**0.79**	**19.05**	**11.91**	**268.27**	**-0.69**	**2.39**	**3.40**	**277.37**
10	*10.750*	*0.063*	*0.031*	*0.750*	*0.469*	*10.562*	*-0.027*	*0.094*	*0.134*	*10.92*
300	**323.9**	**1.60**	**0.79**	**19.05**	**11.91**	**318.19**	**-0.76**	**2.77**	**3.96**	**328.17**
12	*12.750*	*0.063*	*0.031*	*0.750*	*0.469*	*12.531*	*-0.030*	*0.109*	*0.156*	*12.92*

(1) The maximum allowable tolerances for IPS Pipe from square cut ends is:
0.76mm *(0.030")* for sizes 32mm – 80mm *(1¼" thru 3")*;
1.14mm *(0.045")* for sizes 100mm – 150mm *(4" – 6")*; and
1.52mm *(0.060")* for sizes 200mm *(8")* and above.

(2) Gasket Seating Surface "A" must be free from score marks, ridges, indentations, projections, loose paint, scale, dirt chips, grease, rust, etc. that would prevent a positive seal.

(3) Groove Diameter "C" must be of uniform depth around the circumference of the pipe.

(4) Groove Depth "D" is a reference dimension only. The Groove Diameter "C" must be maintained.

(5) Minimum Wall Thickness "T" is the minimum wall thickness that should be roll grooved.

(6) Maximum allowable pipe end flare diameter is measured at the pipe end diameter.

Refer to back cover for country-specific contact information.

Grinnell

Cut Groove Standard Specification for Steel & Other IPS Pipe

Tech Data Sheet: TFP1898

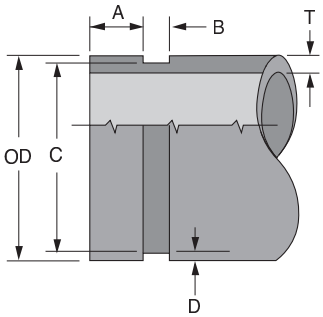

Nominal Pipe Size mm *Inches*	Pipe O.D. mm *Inches*			A ±0.030" *± 0,76mm* mm *Inches*	B ±0.030" *± 0,76mm* mm *Inches*	C Groove Diameter mm *Inches*		D Groove Depth (ref. only) mm *Inches*	T Minimum Wall mm *Inches*
	O.D.	Tolerance +	Tolerance -			Actual	Tol. +0.000		
25	33.4	0.33	0.33	15.88	7.95	30.23	-0.38	1.57	3.38
1	*1.315*	*0.013*	*0.013*	*0.625*	*0.313*	*1.190*	*-0.015*	*0.062*	*0.133*
32	42.4	0.41	0.41	15.88	7.95	38.99	-0.38	1.60	3.56
1¼	*1.660*	*0.016*	*0.016*	*0.625*	*0.313*	*1.535*	*-0.015*	*0.062*	*0.140*
40	48.3	0.48	0.48	15.88	7.95	45.09	-0.38	1.60	3.68
1½	*1.900*	*0.019*	*0.019*	*0.625*	*0.313*	*1.775*	*-0.015*	*0.062*	*0.145*
50	60.3	0.61	0.61	15.88	7.95	57.15	-0.38	1.60	3.91
2	*2.375*	*0.024*	*0.024*	*0.625*	*0.313*	*2.250*	*-0.015*	*0.062*	*0.154*
65	73.0	0.74	0.74	15.88	7.95	69.09	-0.46	1.98	4.78
2½	*2.875*	*0.029*	*0.029*	*0.625*	*0.313*	*2.720*	*-0.018*	*0.078*	*0.188*
65	76.1	0.76	0.76	15.88	7.95	72.26	-0.46	1.93	4.78
76,1mm	*3.000*	*0.030*	*0.030*	*0.625*	*0.313*	*2.845*	*-0.018*	*0.076*	*0.188*
80	88.9	0.89	0.79	15.88	7.95	84.94	-0.46	1.98	4.78
3	*3.500*	*0.035*	*0.031*	*0.625*	*0.313*	*3.344*	*-0.018*	*0.078*	*0.188*
100	108.0	1.07	0.79	15.88	9.53	103.73	-0.51	2.11	5.16
108.0mm	*4.252*	*0.042*	*0.031*	*0.625*	*0.375*	*4.084*	*-0.020*	*0.083*	*0.203*
100	114.3	1.14	0.79	15.88	9.53	110.08	-0.51	2.11	5.16
4	*4.500*	*0.045*	*0.031*	*0.625*	*0.375*	*4.334*	*-0.020*	*0.083*	*0.203*
125	133.0	1.35	0.79	15.88	9.53	129.13	-0.51	2.11	5.16
133.0mm	*5.236*	*0.052*	*0.031*	*0.625*	*0.375*	*5.084*	*-0.020*	*0.083*	*0.203*
125	139.7	1.42	0.79	15.88	9.53	135.48	-0.51	2.11	5.16
139,7mm	*5.500*	*0.056*	*0.031*	*0.625*	*0.375*	*5.334*	*-0.020*	*0.083*	*0.203*
125	141.3	1.42	0.79	15.88	9.53	137.03	-0.56	2.13	5.16
5	*5.563*	*0.056*	*0.031*	*0.625*	*0.375*	*5.395*	*-0.022*	*0.084*	*0.203*
150	159.0	1.60	0.79	15.88	9.53	154.53	-0.56	2.11	5.56
159.0mm	*6.260*	*0.063*	*0.031*	*0.625*	*0.375*	*6.084*	*-0.022*	*0.083*	*0.219*
150	165.1	1.60	0.79	15.88	9.53	160.78	-0.56	2.16	5.56
165,1mm	*6.500*	*0.063*	*0.031*	*0.625*	*0.375*	*6.330*	*-0.022*	*0.085*	*0.219*
150	168.3	1.60	0.79	15.88	9.53	163.96	-0.56	2.16	5.56
6	*6.625*	*0.063*	*0.031*	*0.625*	*0.375*	*6.455*	*-0.022*	*0.085*	*0.219*
200	219.1	1.60	0.79	19.05	11.13	214.40	-0.64	2.34	6.05
8	*8.625*	*0.063*	*0.031*	*0.750*	*0.438*	*8.441*	*-0.025*	*0.092*	*0.238*
250	273.0	1.60	0.79	19.05	12.70	268.27	-0.69	2.39	6.35
10	*10.750*	*0.063*	*0.031*	*0.750*	*0.500*	*10.562*	*-0.027*	*0.094*	*0.250*
300	323.9	1.60	0.79	19.05	12.70	318.19	-0.76	2.77	7.09
12	*12.750*	*0.063*	*0.031*	*0.750*	*0.500*	*12.531*	*-0.030*	*0.109*	*0.279*

(1) The maximum allowable tolerances for IPS Pipe from square cut ends is:
0.76mm *(0.030")* for sizes 32mm – 80mm *(1¼" thru 3")*;
1.14mm *(0.045")* for sizes 100mm – 150mm *(4" – 6")*; and
1.52mm *(0.060")* for sizes 200mm *(8")* and above.

(2) Gasket Seating Surface "A" must be free from score marks, ridges, indentations, projections, loose paint, scale, dirt chips, grease, rust, etc. that would prevent a positive seal.

(3) Groove Diameter "C" must be of uniform depth around the circumference of the pipe.

(4) Groove Depth "D" is a reference dimension only. The Groove Diameter "C" must be maintained.

(5) Minimum Wall Thickness "T" is the minimum wall thickness that should be cut grooved.